Project_02 - Multibody kinematic modeling

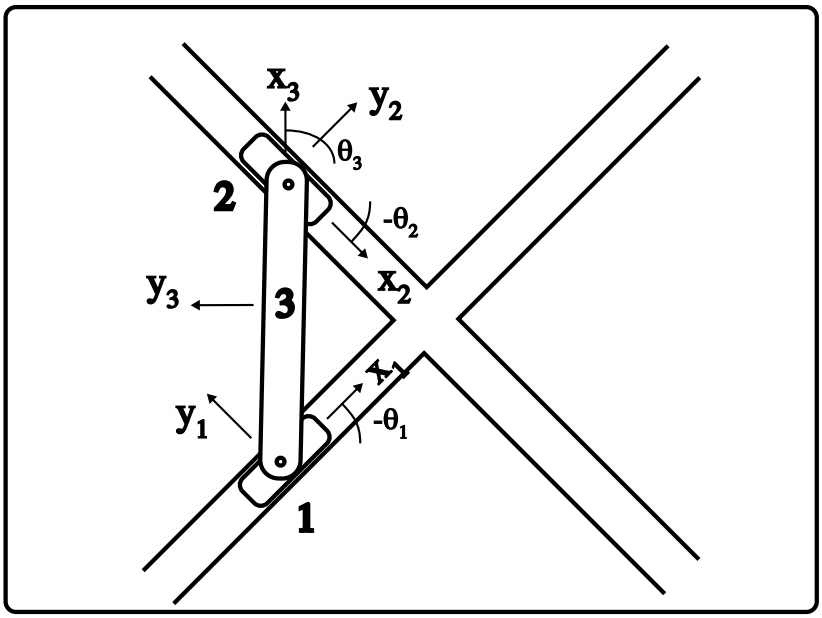

In this project, a rigid bar is connected to two sliding pistons along the diagonal tracks. As the pistons move along the tracks, the rigid bar rotates at a constant rate, $\dot{\theta}_3 = 2\ rad/s$. The figure above has three *relative* ccoordinate systems that move with the bodies:

1. $x_1 - y_1 -$

   describes piston 1 position and orientation, θ_1

2. $x_2 - y_2 -$

   describes piston 2 position and orientation, θ_2

3. $x_3 - y_3 -$

   describes the rigid bar position and orientation, θ_3

Each of the pistons are on tracks at $\pm 45^o$ and the rotating rigid bar is 10 cm. The hinges are mounted to the center of the pistons connecting the ends of the rigid bar.

In this project, you need to

1. determine constraint equations $C(\mathbf{q},\ t)$
2. solve for the velocities, $\dot{q}$ and accelerations, $\ddot{q}$
3. visualize the motion of the system as the rigid bar goes through at least one full rotation

```
using LinearAlgebra
```

```
using Plots
```

L = 0.1

```
# -------------------------
# Parameters
# -------------------------
L = 0.10                    # bar length in meters (10 cm)
```

ω3 = 2.0

```
ω3 = 2.0                    # rad/s
```

θ30 = 0.0

```
θ30 = 0.0                   # initial angle
```

α1 = 0.7853981633974483

```
# Verify these track angles from your original assignment
α1 = π/4                    # example: 45 deg
```

α2 = 2.356194490192345

```
α2 = 3π/4                   # example: 135 deg
```

tspan = 0.0:0.010506998841437435:3.141592653589793

```
# Time
tspan = range(0, 2π/ω3, length=300)   # one full rotation
```

θ3 (generic function with 1 method)

```
# -------------------------
# Functions
# -------------------------
θ3(t) = θ30 + ω3*t
```

solve_positions (generic function with 1 method)

```
function solve_positions(t, α1, α2, L)
    θ = θ3(t)

    A = [
        -cos(α1)   cos(α2)
        -sin(α1)   sin(α2)
    ]

    b = [
        L*cos(θ)
        L*sin(θ)
    ]

    s = A \ b
    return s[1], s[2]
end
```

solve_velocities (generic function with 1 method)

```
function solve_velocities(t, α1, α2, L, ω3)
    θ = θ3(t)

    A = [
        -cos(α1)   cos(α2)
        -sin(α1)   sin(α2)
    ]

    b = [
        -L*ω3*sin(θ)
         L*ω3*cos(θ)
    ]

    sdot = A \ b
    return sdot[1], sdot[2]
end
```

solve_accelerations (generic function with 1 method)

```
function solve_accelerations(t, α1, α2, L, ω3)
    θ = θ3(t)

    A = [
        -cos(α1)   cos(α2)
        -sin(α1)   sin(α2)
    ]

    b = [
        -L*ω3^2*cos(θ)
        -L*ω3^2*sin(θ)
    ]

    sddot = A \ b
    return sddot[1], sddot[2]
end
```

s1_vals = Float64[ ]

```
# -------------------------
# Compute results
# -------------------------
s1_vals = Float64[]
```

s2_vals = []

```
s2_vals = Float64[]
```

s1dot_vals = []

```
s1dot_vals = Float64[]
```

s2dot_vals = []

```
s2dot_vals = Float64[]
```

s1ddot_vals = []

```
s1ddot_vals = Float64[]
```

s2ddot_vals = []

```
s2ddot_vals = Float64[]
```

```
for t in tspan
    s1, s2 = solve_positions(t, α1, α2, L)
    s1dot, s2dot = solve_velocities(t, α1, α2, L, ω3)
    s1ddot, s2ddot = solve_accelerations(t, α1, α2, L, ω3)

    push!(s1_vals, s1)
    push!(s2_vals, s2)
    push!(s1dot_vals, s1dot)
    push!(s2dot_vals, s2dot)
    push!(s1ddot_vals, s1ddot)
    push!(s2ddot_vals, s2ddot)
end
```

piston1_xy (generic function with 1 method)

```
function piston1_xy(s1)
    return s1*cos(α1), s1*sin(α1)
end
```

piston2_xy (generic function with 1 method)

```
function piston2_xy(s2)
    return s2*cos(α2), s2*sin(α2)
end
```

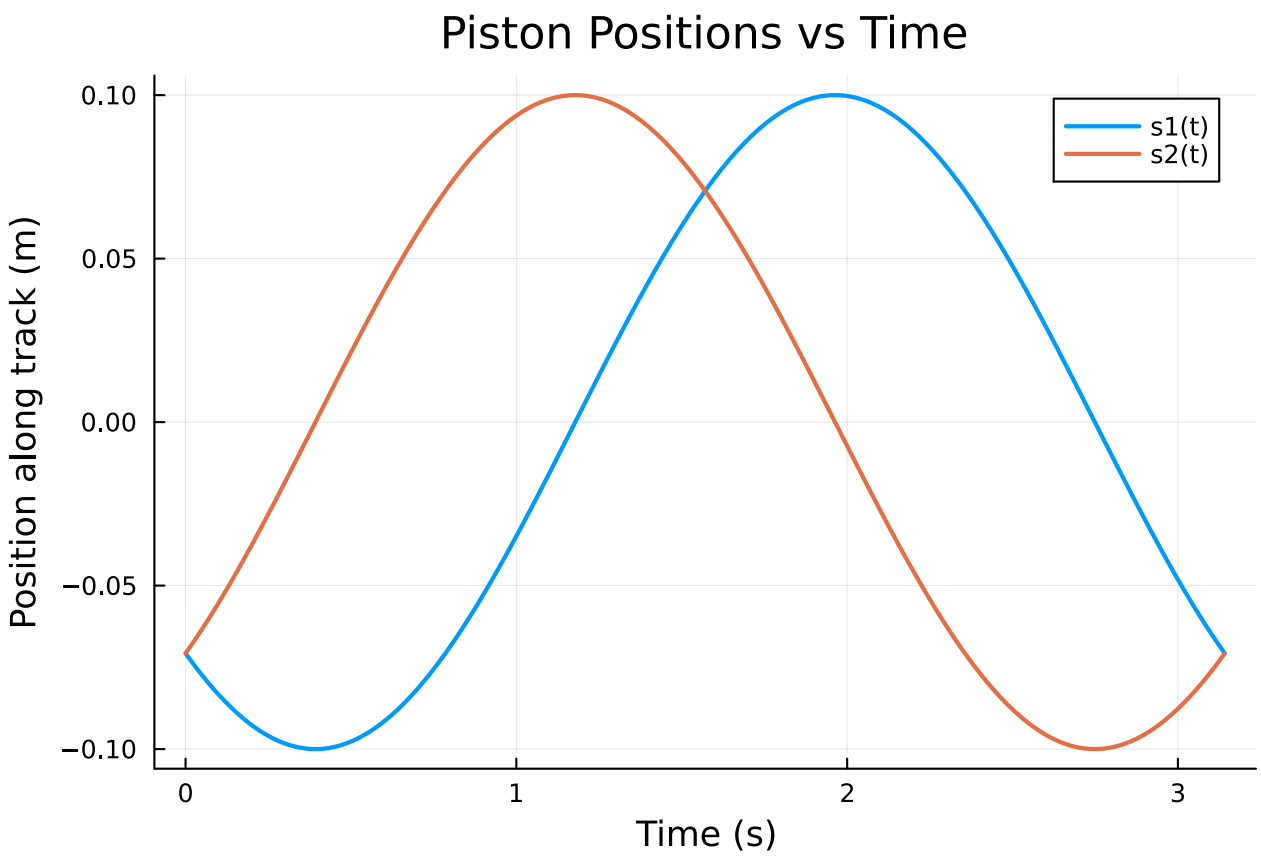


```
plot(
    tspan,
    [s1_vals s2_vals],
    xlabel = "Time (s)",
    ylabel = "Position along track (m)",
    label = ["s1(t)" "s2(t)"],
    linewidth = 2,
    title = "Piston Positions vs Time"
)
```

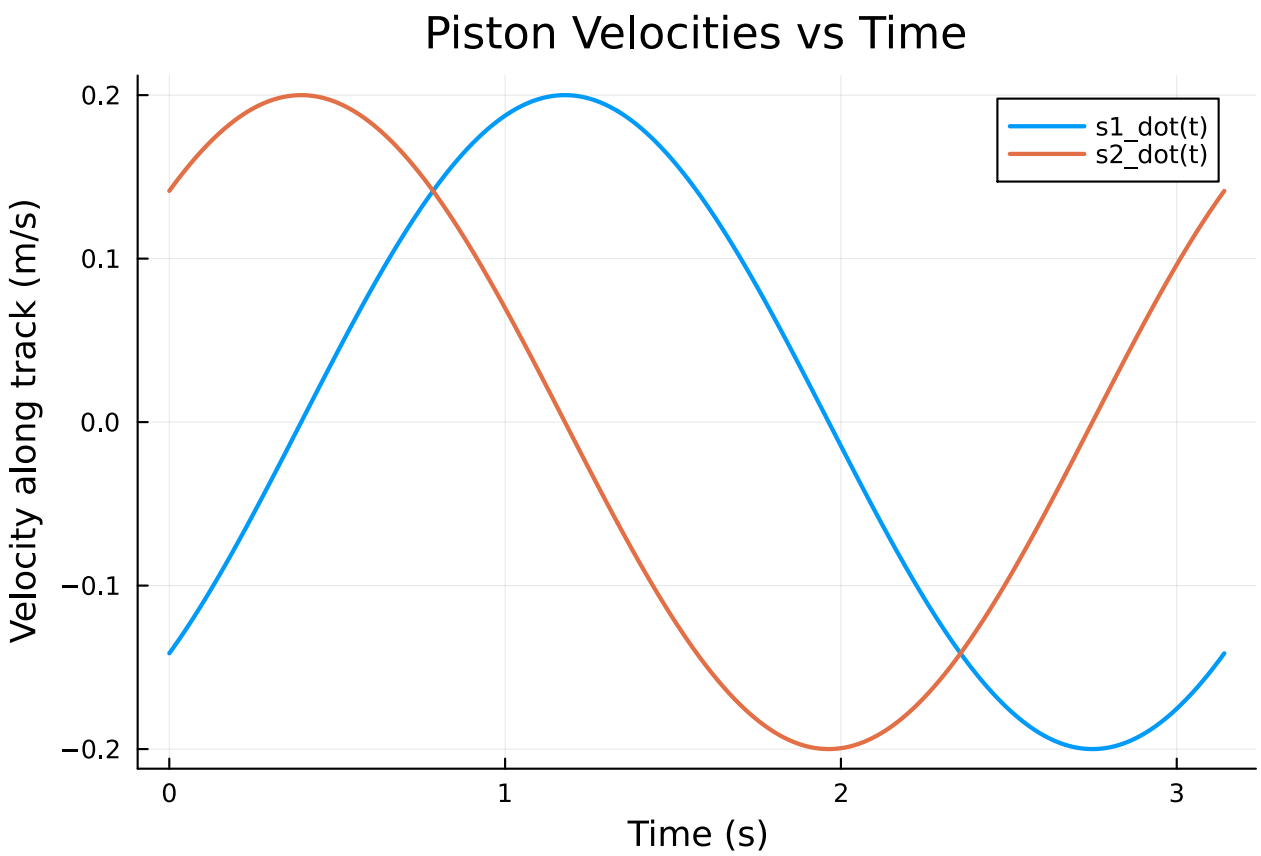


```
plot(
    tspan,
    [s1dot_vals s2dot_vals],
    xlabel = "Time (s)",
    ylabel = "Velocity along track (m/s)",
    label = ["s1_dot(t)" "s2_dot(t)"],
    linewidth = 2,
    title = "Piston Velocities vs Time"
)
```

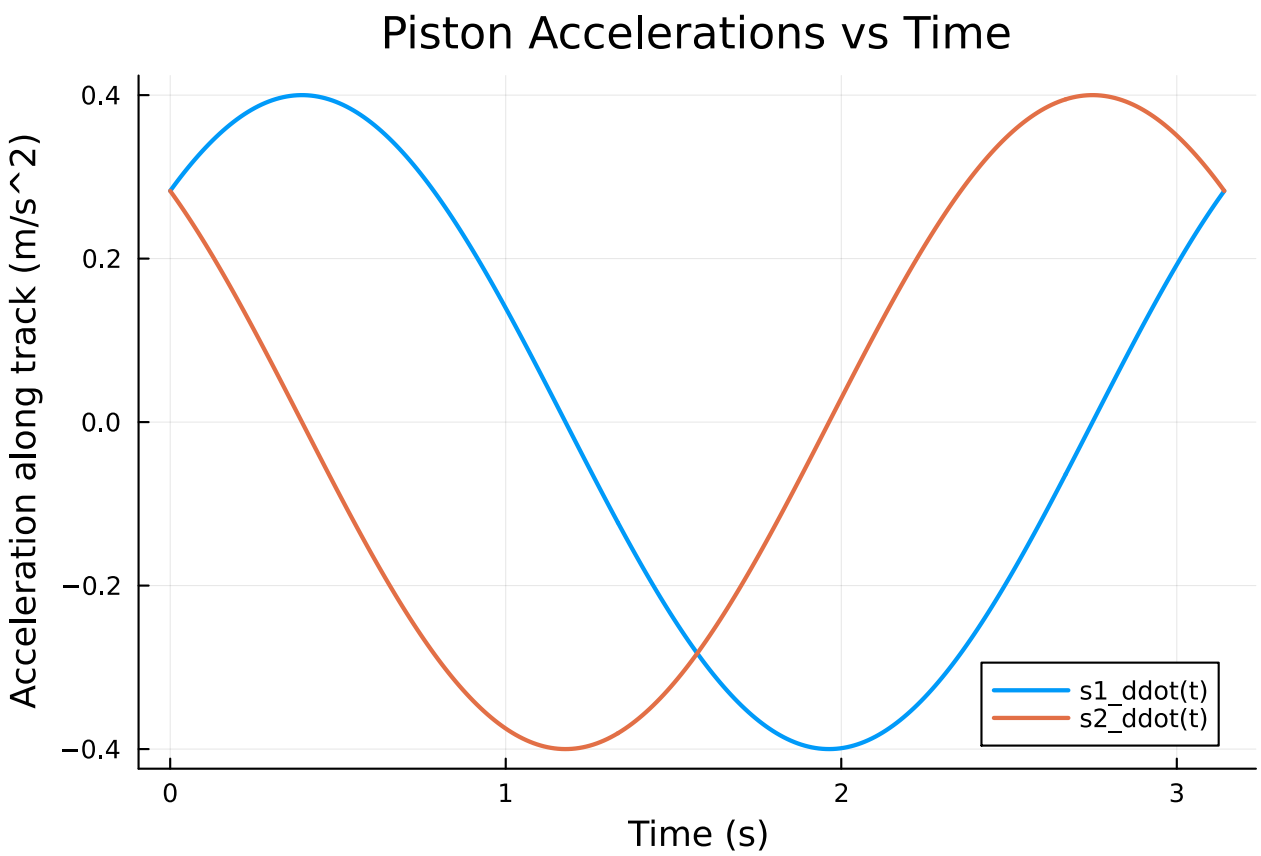


```
plot(
    tspan,
    [s1ddot_vals s2ddot_vals],
    xlabel = "Time (s)",
    ylabel = "Acceleration along track (m/s^2)",
    label = ["s1_ddot(t)" "s2_ddot(t)"],
    linewidth = 2,
    title = "Piston Accelerations vs Time"
)
```

```
Enter cell code...
```